Fast Flow Ductile Iron Twin Motor Centrifugal Submersible Hydraulic Pump

Operation and Maintenance Manual

Revision 4—12/17/2019

FF-3D-TM CENTRIFUGAL SUBMERSIBLE HYDRAULIC PUMP

Operation and Maintenance Manual

Manual: FF-3D-TM	Language: English	Revision: 4

Fast Flow Pumps LLC
9700 Highway 63
Moss Point, MS 39562
Phone (228) 475-2468 • Web fastflowpump.com

Fast Flow Pumps are covered by U.S. Patent No.6,942,448, No. 7,442,003, No. 8,152,443, No. 10,138,891 and other USPTO Patents Pending, European Union Patent, and protected internationally under the Patent Cooperation Treaty.

TABLE OF CONTENTS

Safety Information 4

Description 5

Technical Data 5

Patent Information 5

Installation 6

Unpacking and Hose Installation 6

Hydraulic Power Unit Installation & Pump Connection 7

Hydraulic Connections 8

Pump Testing Procedures 9

Shutdown and Disassembly 10

Exploded View Diagrams 11

Major Pump Parts 11

Torque Spec Sheet 12

Impeller Removal and Replacement 13

Troubleshooting 14

Warranty 15

Safety Precautions

•Read and familiarize yourself with both the FF-3D-TM Manual and the HPU's manual before attempting to operate this pump. Pump service applications are seldom identical, please call Fast Flow Pumps at (228) 475-2468 if you have any questions about your specific application.

•Always wear proper safety equipment while operating this pump. This includes safety goggles, head protection, and safety shoes.

•Inspect all hose connections, ensure that they are properly tightened, inspect screw together hydraulic couplings are fully tightened.

•Inspect the pump for any loose frame bolts or damage. Make sure the pump is fully assembled before operation, failure to do so may result in injury or damage to the pump.

•Maintenance and service MUST only be performed by properly trained personnel. Failure to do so can cause personal injury or damage to this pump.

•Make sure this pump is compatible with your pumping application, do not use this pump with incompatible applications or exceed the limits of this pump.

•Operate below 160°f. Slurry solids must be flowable.

•When lifting this pump, your lifting equipment must be rated for at least 5 times the weight of the pump, discharge hose, and weight of the any fluids in the pump.

•Make sure pump impeller rotation is correct, it should be counterclockwise, spinning towards pump discharge. See diagram on page 6 for more information.

•DO NOT place any hands inside the pump while pump is in operation.

•DO NOT wear loose clothing while operating this pump. Loose equipment or clothing can become trapped inside of moving parts and cause serious injury.

•DO NOT operate this pump without proper training or instructor supervision.

•DO NOT lift any submersible pump by the hydraulic lines.

•DO NOT point hose at bystanders.

•Always disconnect hydraulic lines from pump before servicing.

Local and Application Specific Safety Notes

_____

_____

_____

_____

_____

Description

This operation and maintenance manual applies to the Fast Flow Pump model FF-3D-TM Centrifugal pump system, made up of two major components—the pump head manufactured by Fast Flow Pumps and the Hydraulic Motor mounted on the Pump Head. In order to use this pump system you will also require supply and return hydraulic hose and an external power source.

The pump head is a heavy-duty impeller blade design that will handle varied and severe service use that many other systems cannot. The unique pump design utilizes suction from both sides of the impeller thus eliminating thrust-load problems associated with centrifugal pumps. The FF pump system is ideal for abrasive waste pumping, enviro pumping, barge cleaning, dewatering, and wash down applications or the pumping of any slurried solids. Please note that any use of this pump outside of approved applications can cause damage to the unit. Please read this manual thoroughly before using this pump system.

Fast Facts	
Weight:	70lb (32kg)
Max Water Flow:	600GPM (136m³/h)
Max Vertical Head:	300 Feet (91m)
Operating PSI:	2250-3000 PSI (155-206 Bar)
Hydraulic Flow:	8 to 21 GPM (30-79 lpm)
Power Source:	Hydraulic Driven
Material:	Ductile Iron; SS Frame
Discharge:	3" Male Cam Lock
Dimensions:	29"x10"x12"(73cm x 25cm x 30cm)
Hydraulic Oil:	AW-32 or AW-46

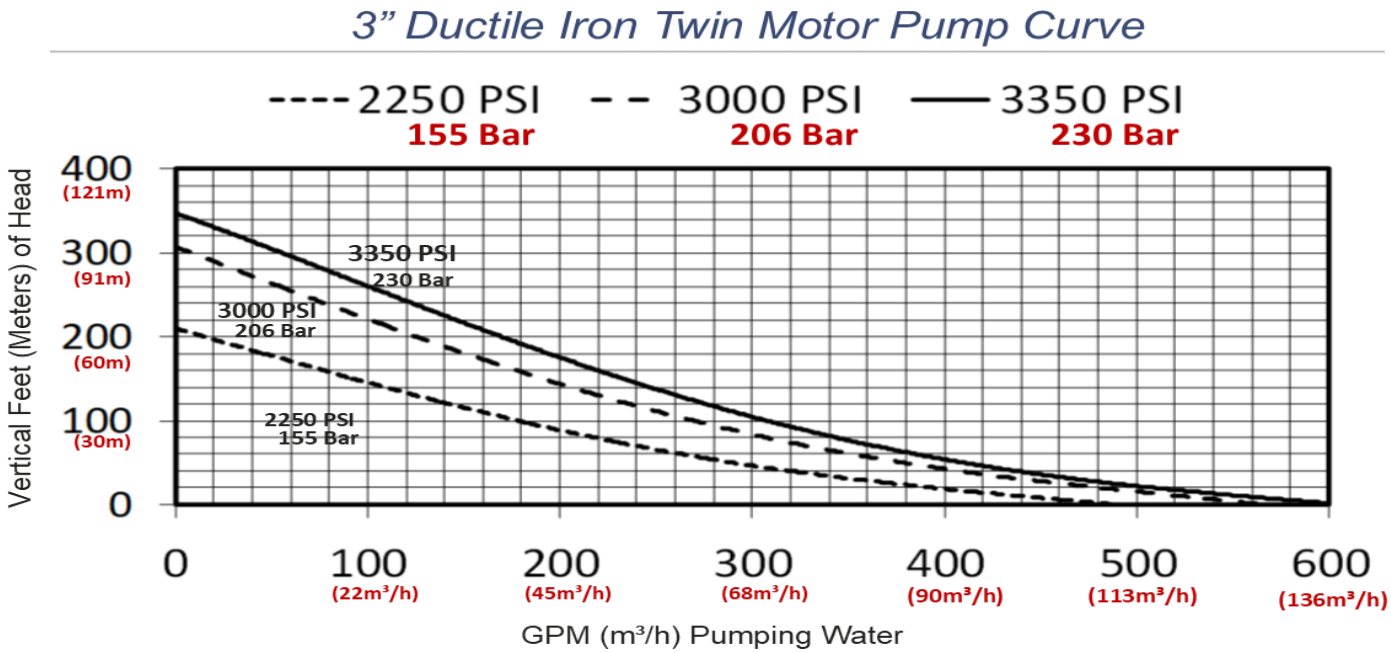

Installation

Before operating this pump system, please go through the following steps to ensure safe and efficient operation.

Important!

•Read and familiarize yourself with the manuals for the pump system as well as any manuals for external hardware, such as the power source.

•Inspect the pump head and frame for any damage such as loose bolts, cracks, dents, foreign objects, or damaged threads.

•Check for and tighten loose attachments, make sure couplings are properly installed and any hydraulic hoses are properly installed. Double check discharge camlock fitting connections. Ensure hydraulic couplings are fully tightened.

•Ensure correct pump rotation, pump impeller rotation should be counterclockwise spinning towards discharge.

Unpacking

•Ensure you are working on a level and dry surface with adequate space and assistance to remove the components from shipping and packing materials.

•Recycle shipping and packing materials as appropriate.

•Consult the separate manuals provided by the motor, hydraulic power unit, and hydraulic hose manufacturers as necessary.

•Ensure that all packing material has been removed from the pump housing and that the impeller rotates freely.

•Ensure the hydraulic motor and hose couplings are free of blockage, have not been damaged, and properly match.

•Contact Fast Flow Pumps or an approved service provider if any system component appears to be damaged, defective, or incomplete.

Hose Installation

•Connect the hoses from the power source-connect the return hose first, when turning off the unit the return hose should be disconnected last. This minimizes trapped pressure within the motor.

•Fully tighten the screw together couplings.

•Ensure the flow is in the proper direction. Hydraulic Flow should be counterclockwise towards discharge.

Fluid Power System | Hydraulic Power Unit (HPU)

•Follow any warning stickers and instructional stickers on the HPU, as well as reading the manual.

•Ensure the HPU has a flow of 8-21 GPM (30-79LPM) @ 2250-3300 PSI (155-227 Bar) and make sure the system operating pressure is set between 1500 PSI to 3000PSI. (103-206 Bar)

•Ensure that the system operating pressure does not exceed 3300 PSI (227 Bar)

•Check pump inlets, make sure there is no debris inside.

•Always disconnect hydraulic lines before servicing pump

Make sure you follow any additional directions found in the manual for the power unit. Failure to do so may result in equipment failure or personal damage. These instructions may not be applicable to non-FFP Power Units.

Connecting the Pump

•Connect hoses from HPU to pump, using the below diagram as reference.

•Turn on the power unit and perform a Dry Run test, described on the next page.

•Connect lifting shackle to the FF Lifting Ring, and use it to lower the pump into the fluids being pumped. Handling the pump by the hydraulic hoses/couplings can cause equipment damage.

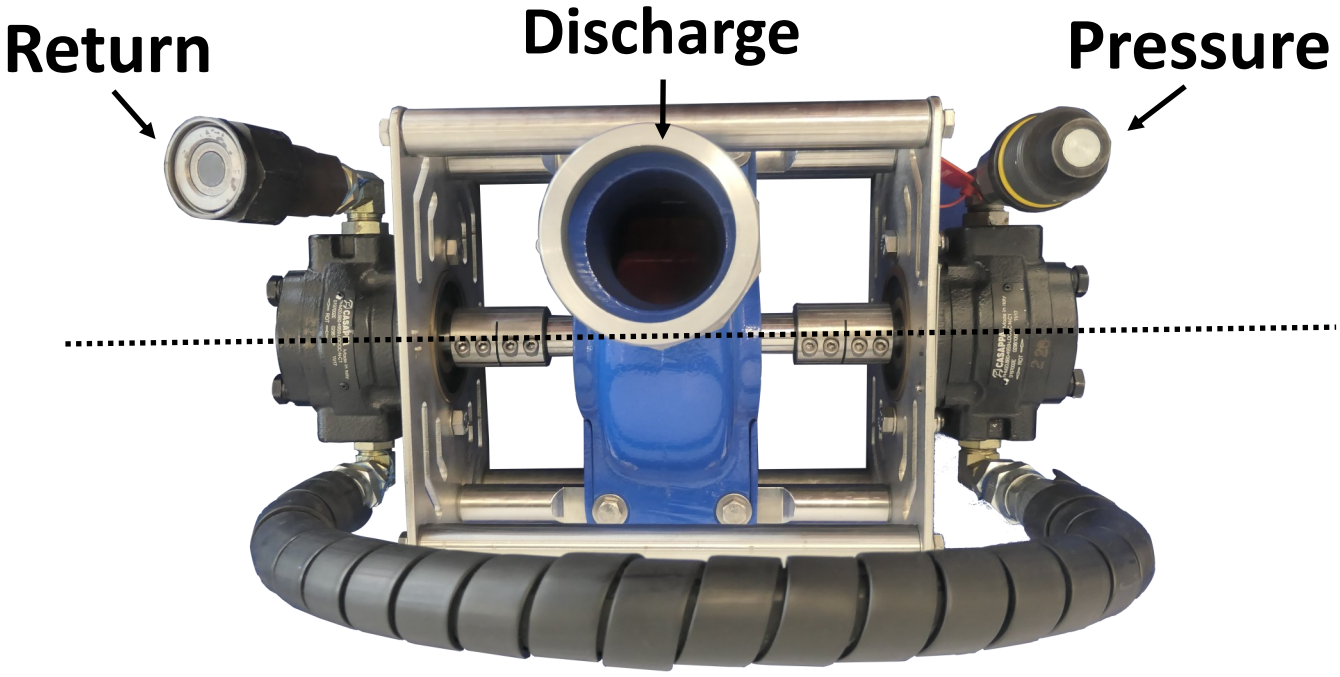

Notice: Couplings align with discharge.

Hydraulic Connections

1. Clean the mating surface of the couplings to avoid contaminating the circuit.
2. Pull the connection sleeve of the female coupling forward
3. Align the female and male coupling holding the connection sleeve and thread together and turning the sleeve.
4. Keep couplers aligned during connection process. Do not push the couplings together.
5. Screw the connecting sleeve of the female until metal surface contact with the male coupling is complete, the yellow O-ring should be concealed.
6. To disconnect turn the sleeve from the contact position using a wrench, then unscrew making sure the couplings stay aligned through the entire process.

Incorrect Coupling—O-Ring Exposed

Correct Coupling— Metal to Metal Contact

Metal to Metal Contact

Seal Area

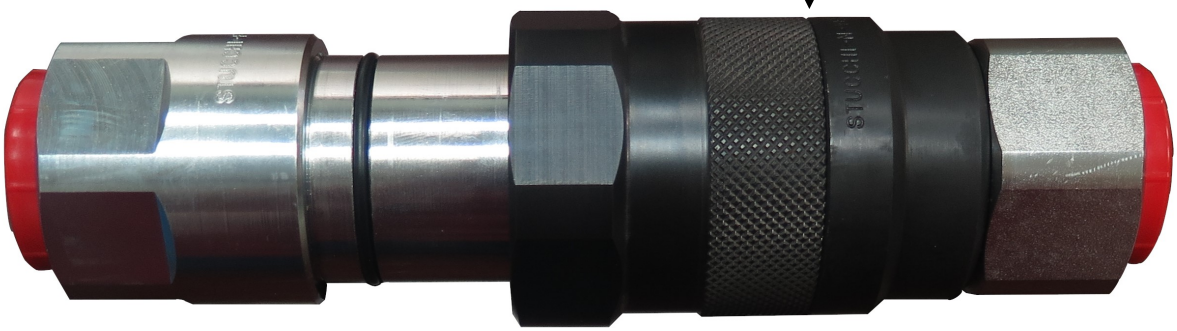

Female/Coupler

Male/Nipple

Warning! Do not attempt to connect hoses with the engines and pump running.

Pump System Test Procedures

Dry Run Spin Test

The FF 3DTA is capable of Running Dry for extended periods of time, and it is best practice to perform a run dry test before using the pump. To perform this test, first double check that all hydraulic couplings are fully tightened, then connect the hydraulic system and run the FF 3D pump dry with varying speeds for 1-2 minutes. The pump has no internal friction. At lower rpms the pump head can be left running without damage.

Correct Rotation of Pump

Pump should rotate counter-clockwise towards Discharge

HPU Start-Up Checklist

WARNING: These instructions may not apply to non-FFP Power Units or HPUs, please read all technical literature associated with your power unit before running the system.

- Always dry run spin test pump before placing pump into pit. Do not skip this test. That will leak test the entire hydraulic system, verify impeller direction, and function test the hydraulic motor.
- All hydraulic couplings must be fully tightened.
- Check hydraulic tank oil level
- Check hydraulic filter and clear fluid color
- Check engine oil and fuel levels
- Leak check hydraulic hose and couplings
- Inspect hydraulic lines for cuts, jacket abrasion.

Shutdown and Disassembly

Shut Down

•Slowly shut down the power unit, starting/stopping fluid flow suddenly can cause damage to the pump and motor seals.

In case of Emergency, you can use the manual shutdown on the hydraulic power unit.

Disassembly

•Ensure all moving parts have come to a complete stop.

•Shut down the HPU and turn key switch to the off position.

•Place pump head on flat surface.

•Ensure that there is no trapped or residual pressure in the system.

•Disconnect hydraulic supply/return hoses.

•Clean the hydraulic submersible pump after each use.

•Avoid hydraulic fluid contamination, all lines and couplings should not be open to atmosphere.

Pump Head Exploded View w/Parts List

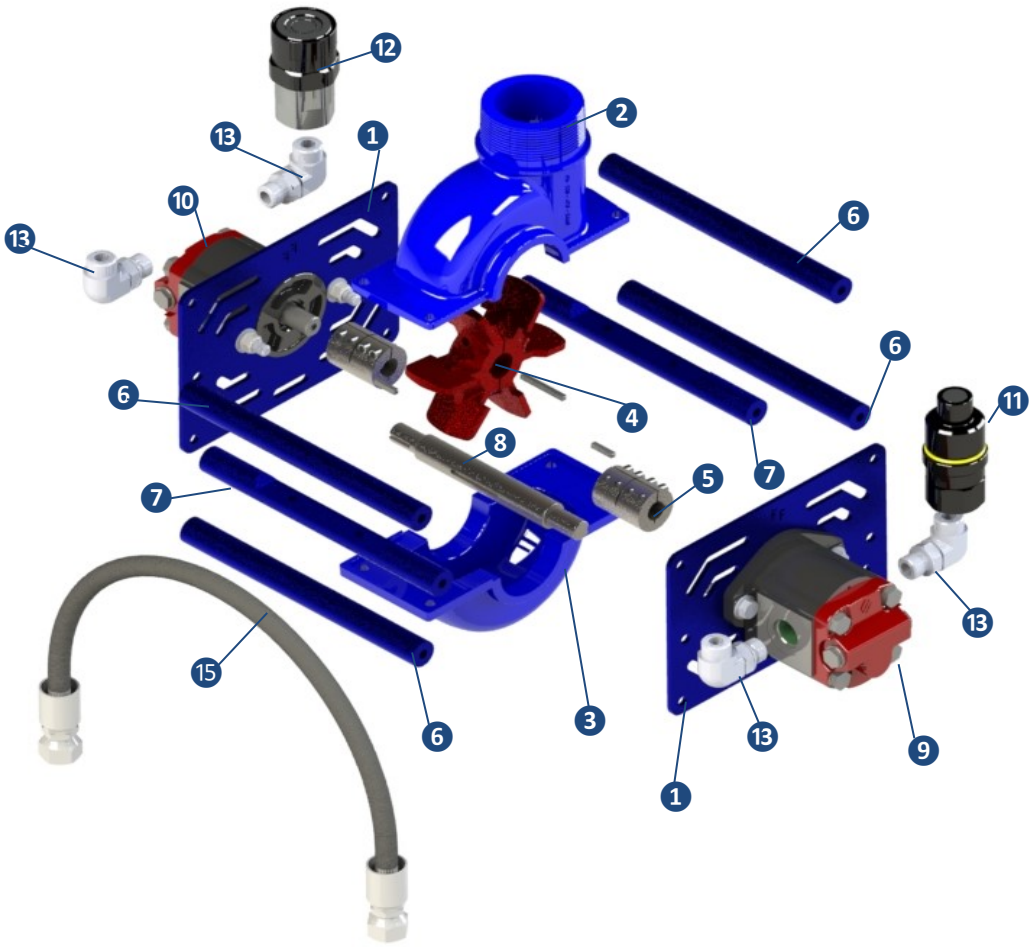

Major Pump Parts

Description	Part No.	Qty	Description	Part No.	Qty
1. FF3D Motor Plate	MP-3D-SS	2	12. Female Hydraulic Coupling	1-VEP-F	1
2. 3" Upper Volute Casing	VU-3D	1	13. 3/4"Male Pipex3/4" MORB90◦	12MPx12MB90	4
3. 3" Lower Volute Casing	VL-3D	1	14. Hydraulic Hose Asst	3D Hose Bridle	1
4. Ductile Iron Impeller	IM-3D	1	Not Shown		
5. SS Climax Coupling	CP..75x2.25SS	2	15. 1" M Pipex ¾"FPipe Bushing	16MPx12FP	2
6. FF3DTM Frame Bar	FB-3D-SS	4	16. 3" Male Camlock	CAM-3D	1
7. FF3DTM Mount Bar	MB-3D-SS	2	17. Metal Product Tag	Serial Tag	1
8. FF3DTM Drive Shaft	DS-3DTM-SS	1	18. Hyd Motor Coupling KS	MK-3D-SS	2
9. Driving Hydraulic Motor	DM-3AL-13.8	1	19. Coupled Shaft Key Stock	IK-3D-SS	1
10. Flushing Hydraulic Motor	FM-3AL-13.8	1	21. Red Pressure Label Tag	6-CRE	1
11. Male Hydraulic Coupling	1-VEP-M	1			

Torque Spec Sheet/Hardware List

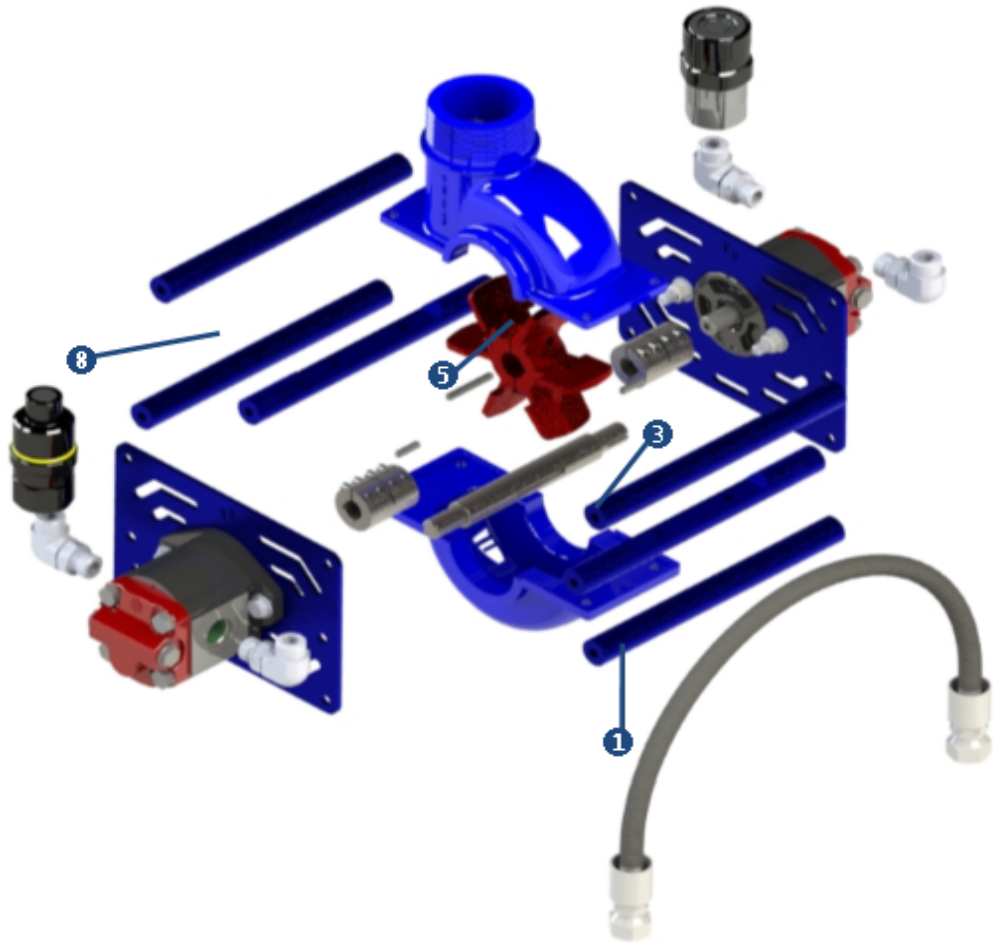

Hardware List

DESCRIPTION	Qty	Torque Specs	Anti-Seize	Loctite	Primer
1. 3/8—16x1" Stainless Hex Head Bolt	12	17 ft-lb/23 Nm		✓	✓
2. 3/8 Stainless Flatwashers	8	Not Applicable			
3. 3/8-16 x 2" Stainless Hex Head Bolt	4	17 ft-lb/23 Nm		✓	✓
4. 3/8" - 16 Stainless Locknut	4	Not Applicable			
5. 5/16"-18 x 1 3/4" Stainless Socket Screw	2	10 ft-lb/13 Nm	✓		
6. 5/16" Nordlock Washers	2	Not Applicable			
7. 3/8" Nordlock Washers	12	Not Applicable			
8. 7/16-14 x 1 1/2" Stainless Hex Head	4	28 ft-lb/37 Nm	✓		
9. 7/16" Stainless Flatwashers Special OD	4	Not Applicable			
10. 7/16"-14 Stainless Nylon Locknuts	4	Not Applicable			

Impeller Replacement

Disassembly

1.Make certain there is no residual pressure in the hydraulic system

2. Disconnect hydraulic power hoses from the pump head

3. Drain off any fluid by inverting the pump head and clean.

4. Place the pump head on a solid flat surface with adequate working space.

5. Remove two upper frame bars

6. Remove four bolts from pump & remove pump case

7. Remove 2 bolts (#5 on Hardware List) and Nordlock washers from impeller #4.

To reassemble simply reverse order of removal procedure and confirm impeller is centered in volute. After reassembly is complete, hand spin the impeller with pump fully assembled. Impeller gap should have the same clearance from impeller blade to housing. Tighten all impeller bolts equally with the same force-pounds of torque.

Failing to follow these instructions closely may cause damage to the pump.

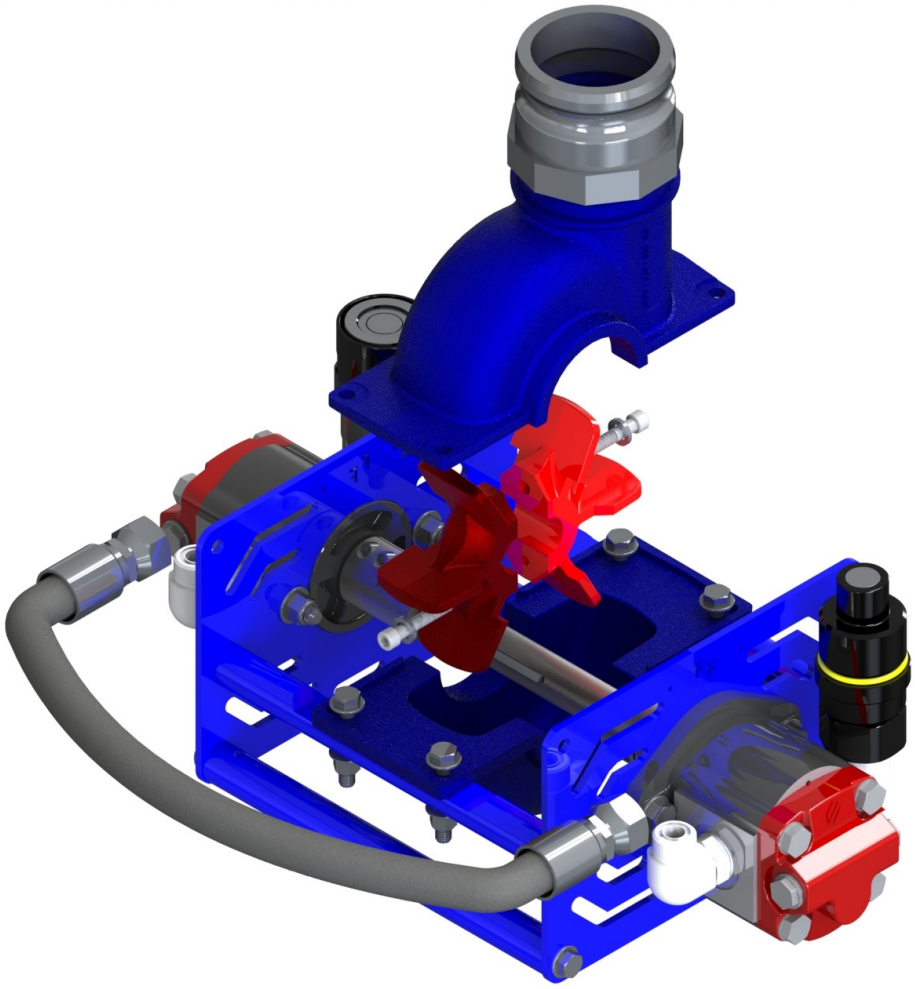

Troubleshooting

Problem	Possible Causes	Resolutions
Pump will not Turn	1. No hydraulic fluid or pressure. 2. Bad hydraulic couplers or not screwed together properly 3. Impeller jammed 4. Damaged gear motor 5. Impeller shaft to hydraulic motor coupling problems.	1. Turn on power unit and test that appropriate flow and pressure is available with flow gauge and pressure meter. 2. Connect all supply and return hydraulic hoses together, make sure all connections are fully tightened. Flow hydraulic fluid without pump attached. 3. Remove any debris from the volute. This includes rope, wire, rags, and nylon bags. 4. Replace gear motor 5. Check keyway for damage.
Poor Performance or Low Flow Rate	1. Hydraulic flow reversed. 2. Improper hydraulic fluid flow. 3. Pump inlet jammed. 4. Discharge hose is too small 5. Impeller Damage 6. Contaminated Hydraulic Fluid 7. Hydraulic motor worn out.	1. Make sure hoses are connected properly, see Pump Diagram on page 5. 2. Turn on power unit and test that appropriate flow and pressure is available with flow gauge and pressure meter. 3. Clean the inlet and make sure any debris is removed. Remove hydraulic lines before servicing. 4. Use a bigger discharge hose to increase flow rate 5. Replace Impeller, consider using debris cage if pit contains rocks. 6. Drain bad oil out of hydraulic system and clean out the tank with mineral spirits and refill with new oil. 7. Inspect motor wall internals, if okay, install new motor seal kit.
Hydraulic Back Pressure	1. Return line not fully open	1. Check and tighten all connections. 2. Increase size of return hydraulic hose

Warranty Information

Warranty for Submersible Pumps, Fast Flow Pumps warrants to the original purchaser only that this product is free from defects in material and workmanship, and agrees to repair or replace, at Fast Flow's option, any submersible pump part found to be defective within 12 months from the date of purchase. This warranty is not transferable. This warranty does not cover damages resulting from shipping damage, improper installation, lack of service, incorrect power, or faulty severe service applications such as pumping abrasives, rocks, corrosives, or fluids in excess of 160°F. Warranty coverage is normally not available for wear parts such as: Pump Volutes, Impellers, drive shaft, and hydraulic motor seals. Any modification or alteration of this equipment will void the warranty. Any claim for warranty damage must include photos of the defective part or parts, the serial number from the equipment, and a detailed description of the defect and possible causes. All warranty claims should be emailed to www.fastflowpump.com or mailed to our Moss Point MS address.

Submersible Pumps judged by Fast Flow Pumps to have been defective in workmanship or materials when shipped from the factory and within the warranty period will be either repaired or replaced at option free of charge excluding motor freight both ways, within the continental United States.

Fast Flow LLC Limited Warranty for Hydraulic Power Units. Fast Flow Pump warrants to the original purchaser that this product is free from defects in material and workmanship, and agrees to repair or replace, at our option, any part found to be defective within 12 months or 500 hours of use (whichever comes first) from the date of purchase. This warranty is not transferable. This warranty does not cover damages resulting from normal wear, abuse, careless handling, lack of service / proper preventatives mainentance, improper fueling, improper application, and improper operation. Warranty coverage is not normally applied for items such as: Tires, belts, hoses, (fuel, oil, hydraulic oil) filters, batteries, and paint.

Fast Flow LLC does not warranty engines – warranty claims for engines must be handled through the engine distributor. Any modification or alteration of this equipment will void the warranty. Any claim for warranty damage must be accompanied by digital photos of the defective part or parts, the serial number from the equipment, and a detailed description of the defect and possible causes.

All warranty claims should contact Fast Flow Pumps at 9700 Hwy 63, Moss Point, MS 39562. Power Units judged by Fast Flow Pumps to have been defective in workmanship or materials when shipped from the factory and within the warranty period, will be either repaired or replaced at the discretion of Fast Flow Pumps free of charge excluding motor freight both ways.

Fast Flow Pumps shall not be liable for any damages, including consequential damages arising out of any breach of warranty and whether or not arising out of or based on Fast Flow's negligence, whether actual or implied, and for damages to any property or person arising out of the purchase or the use, operation or maintenance of the equipment. Fast Flow shall not be responsible for repairs or alterations made by others. No person is authorized to make any representations or warranties on behalf of Fast Flow Pumps and no other person is authorized to alter or extend any of the conditions contained in this warranty